JOCMA15DL-VS4

Rev.A.1.0

DESCRIPTION:

The products are 4-pin optical relays. The device is a very small outline non-leaded photorelay suitable for surface-mount assembly. It consists of an infrared LED optically coupled to a photo-MOSFET and is housed in a VSON4 package. It features low output capacitance, COFF, and thus fast on/off switching of a high-frequency signal, making it ideal for switching applications in high-speed testers. The products are widely used in automatic test equipment, high-speed logic IC testers, high-speed memory testers and measuring instruments.

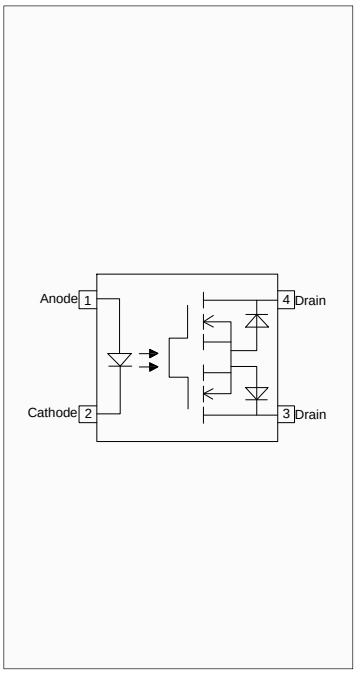

MAIN FEATURES

Isolation voltage 500 Vrms
Operating temperature range -40°C to 110°C
REACH & RoHS compliance
HBM: H3A; MM: M4; CDM: C3
CQC approved
VDE approved
UL approved

ABSOLUTE MAXIMUM RATINGS (Temperature=25°C)

Parameter		Symbol	Value	Unit
Input	Forward Current	I_F	50	mA
	Peak Forward Current	I_{FP}	1	A
	Reverse Voltage	V_R	6	V
	Input Power Dissipation	P_D	75	mW
Detector	Off-state Output Terminal Voltage	V_{OFF}	20	V
	On-state Current	I_{ON}	180	mA
	On-state Current (pulsed)	I_{ONP}	540	mA
	Output Power Dissipation	P_O	200	mW
Isolation Voltage		V_{iso}	500	Vrms
Operating Temperature		T_{opr}	-40~110	
Junction Temperature		T_j	125	

Storage Temperature	T_{stg}	-55~125	
Soldering Temperature	T_{sol}	260	

NOTE1 100μs pulse, 100Hzfrequency
NOTE2 AC for 1minute, R.H.=40~60%

ELECTRICAL CHARACTERISTICS (Temperature=25°C)

Parameter		Symbol	Condition	Min.	Typ.	Max.	Unit
Input	Forward Voltage	V_F	I_F=10mA	-	2	2.5	V
	Reverse Current	I_R	V_R=6V	-	-	1	μA
	Input Capacitance	C_{in}	V=0V f=1MHz	-	30	-	pF
Detector	Off-state Current	I_{OFF}	V_{OFF}=20V	-	-	1	nA
	Output Capacitance	C_{OFF}	V=0V f=1MHz t<1s	-	0.8	1.1	pF
Coupled	Trigger LED Current	I_{FT}	I_{ON}=180mA	-	-	1	mA
	Return LED Current	I_{FC}	I_{OFF}=10μA	0.1	-	-	mA
	On-state Resistance	R_{ON}	I_{ON}=180mA I_F=5mA t<1s	-	3	5	Ω
Switching Characteristics	Isolation Resistance	R_{ISO}	DC500V 40~60%R.H.	-	10^{14}	-	Ω
	Turn On Time	t_{on}	I_F=5mA I_L=Max.	-	15	200	μs
	Turn Off Time	t_{off}		-	50	200	μs

Recommended Operating Conditions

Characteristics	Symbol	Min.	Typ.	Max.	Unit
Supply Voltage	V_{DD}	-	-	16	V
Input Forward Current	I_F	5	7.5	20	mA
On-state Current	I_{ON}	-	-	180	mA

ORDERING INFORMATION

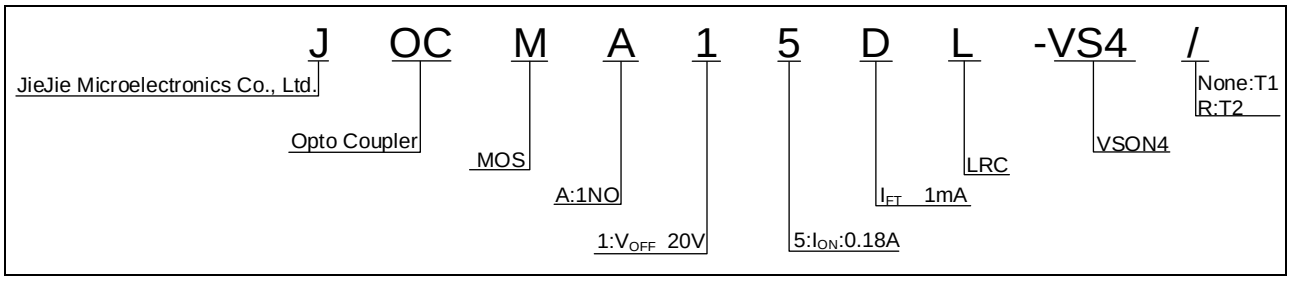

Packing Quantity	
Option	**Quantity**
VSON4	3000 Units/Reel

Characteristics Curves

FIG.1: Max. Allowable LED Forward Current vs. Ambient Temperature

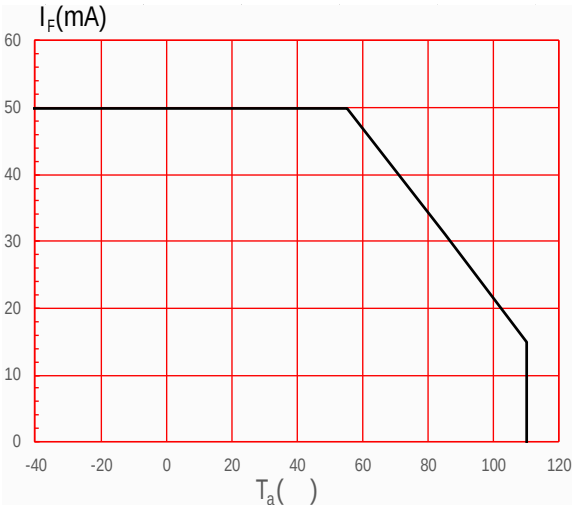

FIG.2: On-state Current vs. Ambient Temperature

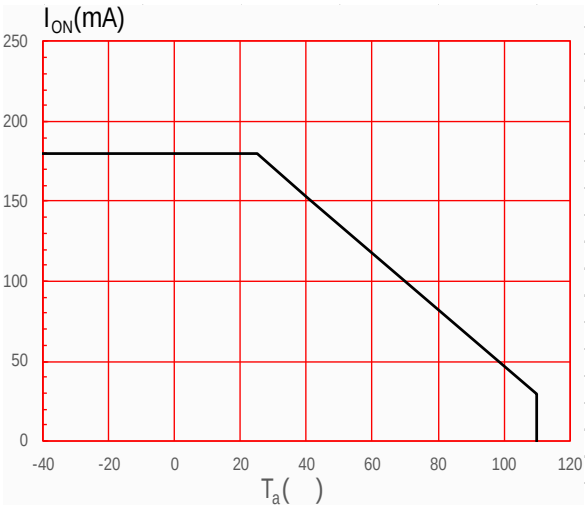

FIG.3: LED Forward Current vs. LED Dropout Voltage

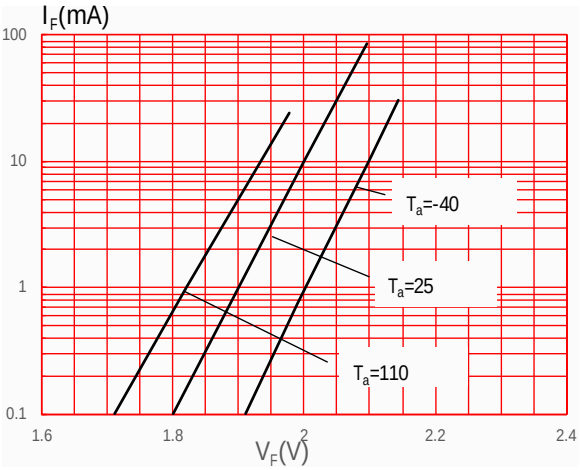

FIG.4: On-state Current vs. On-state Voltage

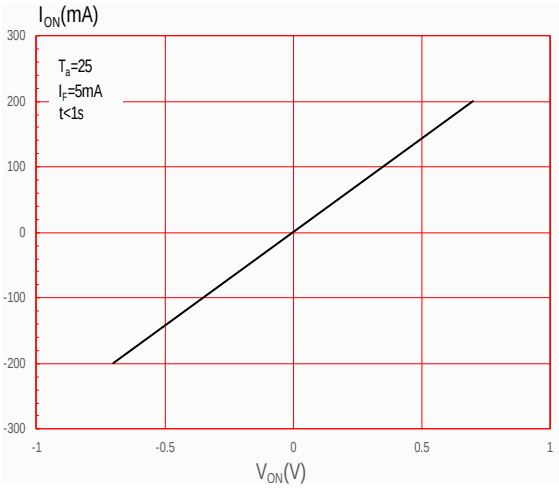

FIG.5: On Resistance vs. Ambient Temperature

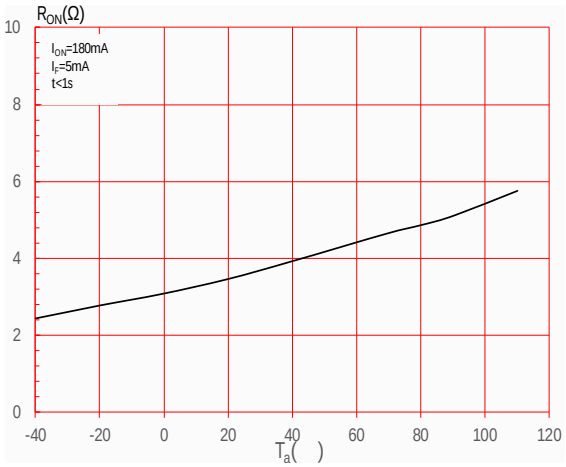

FIG.6: Trigger LED Current vs. Ambient Temperature

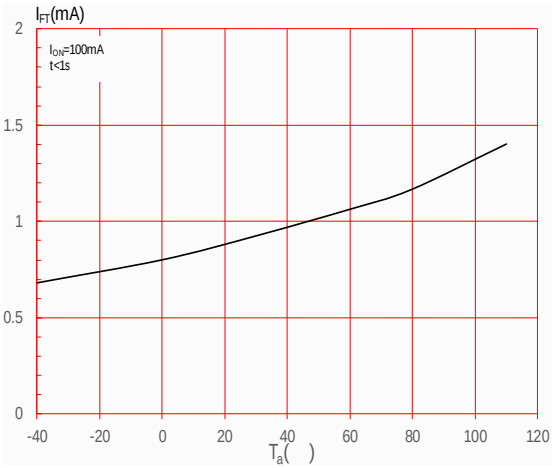

FIG.7: T_{ON},T_{OFF} vs. LED Forward Current

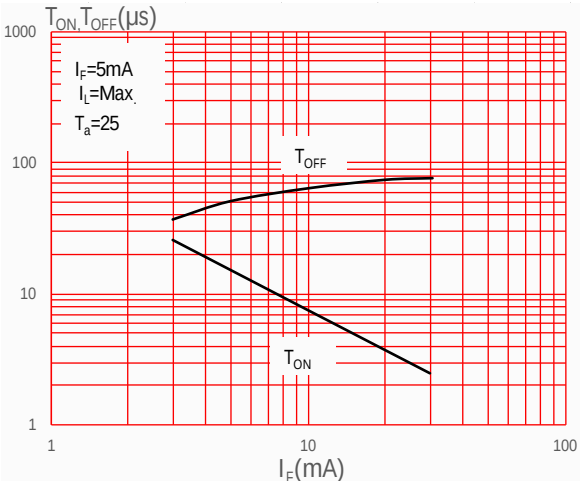

FIG.8: T_{ON},T_{OFF} vs. Ambient Temperature

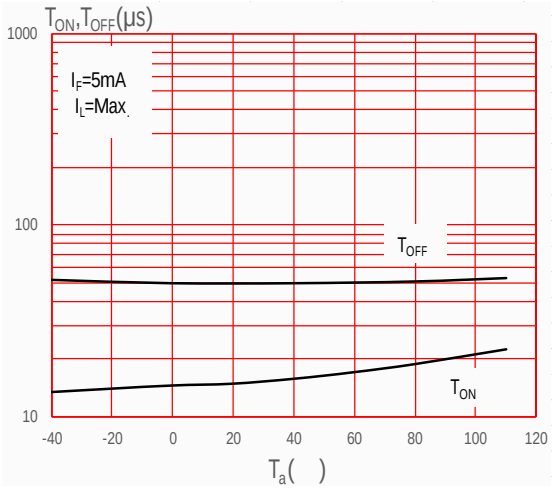

FIG.9: Off-state Current vs. Off-state Voltage

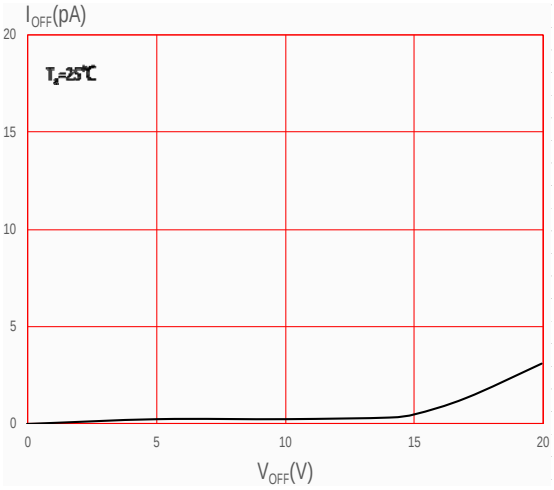

FIG.10: Off-state Current vs. Ambient Temperature

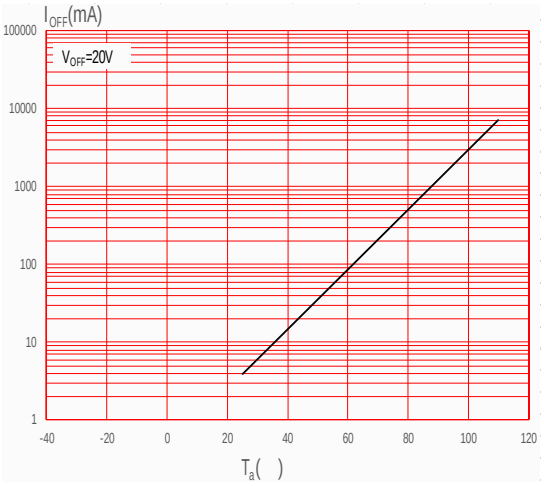

Fig.11: Switching Time Test Circuit and Waveform

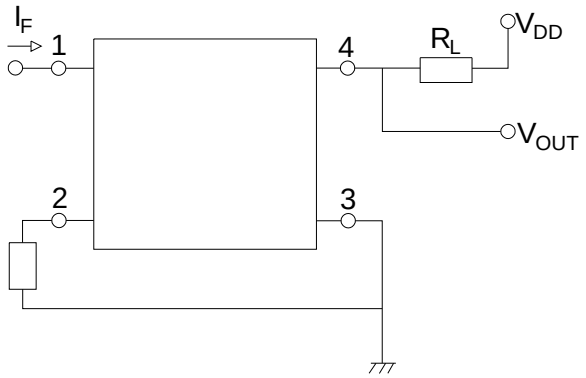

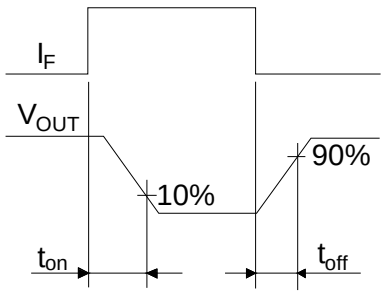

Package Dimension (Unit: mm)

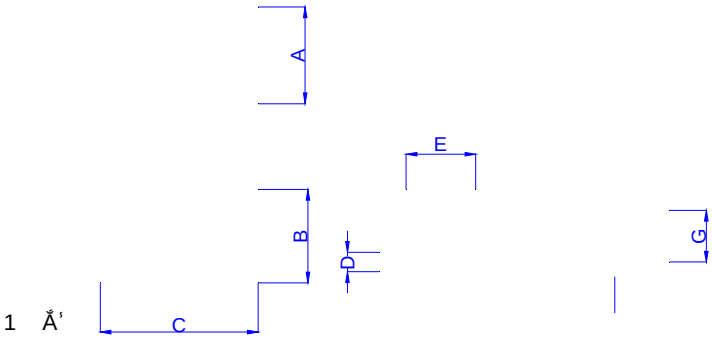

Ref.	Dimensions					
	Millimeters			Inches		
	Min.	Typ.	Max.	Min.	Typ.	Max.
A	1.30		1.70	0.051		0.067
B	1.25		1.65	0.049		0.065
C						
D	0.10		0.50	0.004		0.020
E	0.88		1.28	0.035		0.050
F						
G	0.60		1.00	0.024		0.039
H						

CARRIER TAPE SPECIFICATIONS (Dimensions in mm unless otherwise stated)

REFLOW INFORMATION

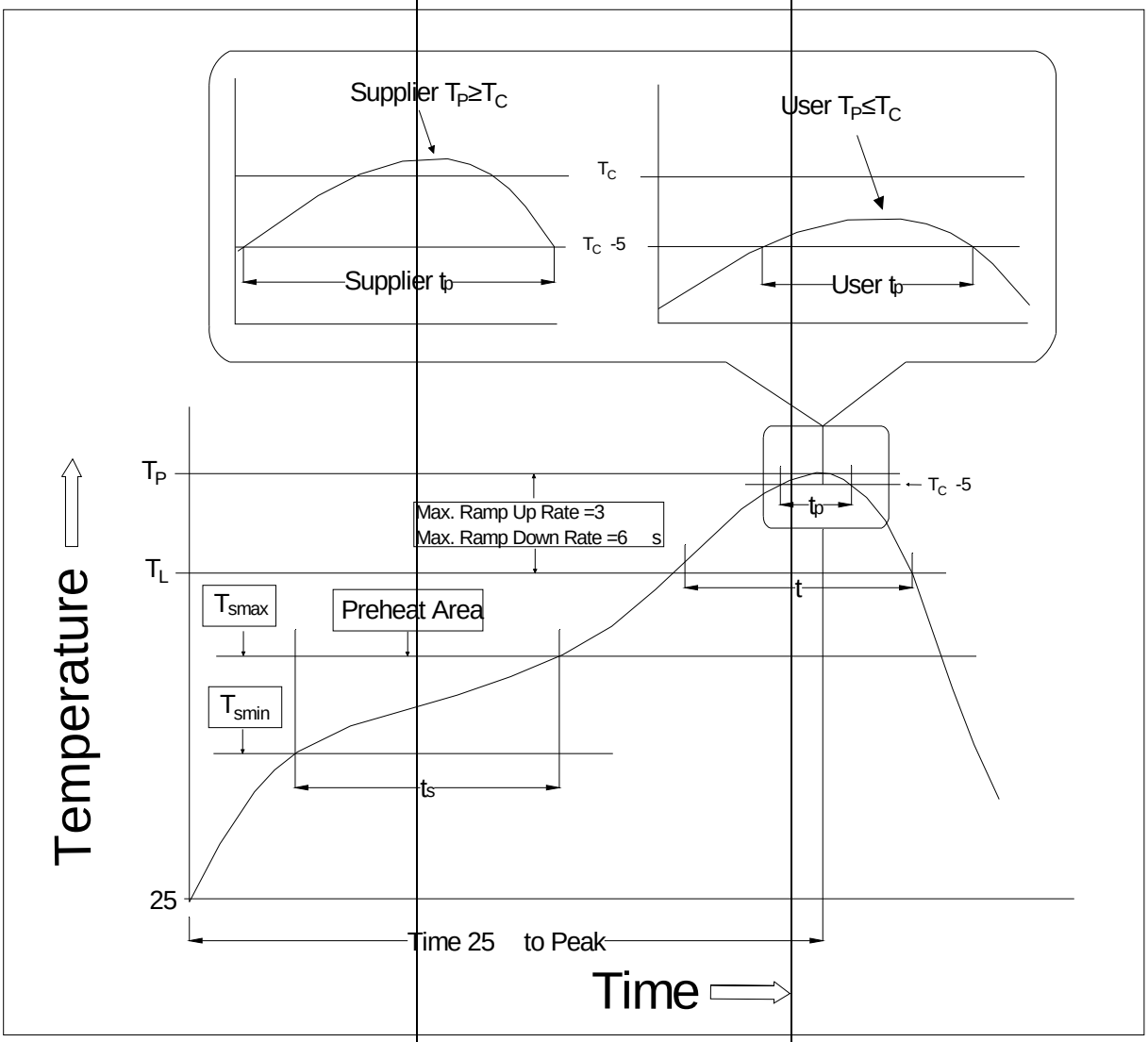

Profile Feature	Sn-Pb Assembly Profile	Pb-Free Assembly Profile
Temperature Min. (Tsmin)	100	150
Temperature Max. (Tsmax)	150	200
Time (ts) from (Tsmin to Tsmax)	60-120 seconds	60-120 seconds
Ramp-up Rate (tL to tP)	3 /second max.	3 /second max.
Liquidus Temperature (TL)	183	217

Time (t υ ą þ ą þ ᵐ Ц ą þ y M ┐183nd ∩

Note:

1. Reflow soldering is recommended at the temperatures and times shown, no more than three times.

2. Avoid direct contact between the epoxy body and any tools or surfaces exceeding its maximum storage temperature.

3. Application of pressure on the epoxy body is prohibited at elevated temperatures. In specific scenarios, any applied force must not exceed 2.5N.

4. Ensure the component has cooled to ambient temperature before proceeding with any subsequent manufacturing steps.

5. The component has a shelf life of one year when stored under standard conditions.

6. Recommend storage Temp.: 0~40°C;

   Recommend storage humidity: <60%;

   MSL level: MSL 3

Information furnished in this document is believed to be accurate and reliable. However, Jiangsu JieJie Microelectronics Co., Ltd. assumes no responsibility for the consequences of use without consideration for such information nor use beyond it. Information mentioned in this document is subject to change without notice, apart from that when an agreement is signed, Jiangsu JieJie complies with the agreement.
Products and information provided in this document have no infringement of patents. Jiangsu JieJie assumes no responsibility for any infringement of other rights of third parties which may result from the use of such products and information. This document supersedes and replaces all information previously supplied.
is a registered trademark of Jiangsu JieJie Microelectronics Co., Ltd.
Copyright © 2026 Jiangsu JieJie Microelectronics Co., Ltd. All rights reserved.