The products are 6-pin optical relays. The device consists of an AlGaAs infrared emitting diode input stage optically coupled to a high-voltage output detector circuit in a plastic DIP6 package with different lead forming options. The detector consists of a high-speed photovoltaic diode array and driver circuitry. The products are widely used in measuring and testing equipment, security and disaster prevention market, industrial machinery and equipment.

High isolation 3750 Vrms
Operating temperature range -40°C to 110°C
REACH & RoHS compliance
HBM: H3A; MM: M4; CDM: C3
CQC approved
VDE approved
UL approved

(Temperature=25°C)

Input	Forward Current	I_F	50	mA
	Peak Forward Current	I_{FP}	1[7]	A
	Reverse Voltage	V_R	6	V
	Input Power Dissipation	P_D	75	mW

í ì ì … • ‰ íµì ò,•Ì Ú(Œ ‹ µ v Ç
(} Œ í u] v µ š U Z X , X A ð ì • ò ì 9

(Temperature=25°C)

Input	Forward Voltage	V_F	I_F=10mA	-	1.2	1.5	V
	Reverse Current	I_R	V_R=6V	-	-	1	µA
	Action Current	$I_{F(OFF)}$	I_O=$I_{O(MAX)}$	-	1.5	3	mA
	Reset Current	$I_{F(ON)}$	I_O=$I_{O(MAX)}$	0.4	0.8	-	mA
Output	On Resistance	R_{on}	I_F=0mA, I_O= $I_{O(MAX)}$	-	10	15	Ω
	Off State Leakage Current	I_{Leak}	I_F=3mA, V_O=Max.	-	-	1	µA
Switching Characteristics	Isolation Resistance	R_{ISO}	DC500V 40~60%R.H.	10^{12}	-	-	Ω
	Floating Capacitance	C_{IO}	V=0, f=1MHz	-	0.8	-	pF
	Turn On Time	t_{on}	I_F=5mA, I_O=Max.	-	0.2	1	ms
	Turn Off Time	t_{off}	I_F=5mA, I_O=Max.	-	0.2	1	ms

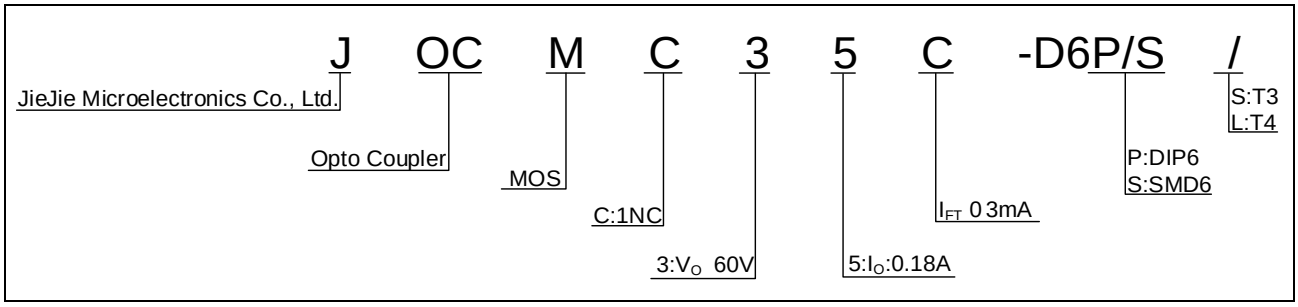

/ W	ò ì h v] š • l d µ	ð ì d } µ Æ	• l / ñ v / Œ v Œ } Æ l K µ š v Œ š • } Æ A
^ D	í î ì ì h v] š • l Z o	î Z } Æ 6 • l / v ñ Œ v v Œ } Æ l K l µ š v Œ š • } Æ A

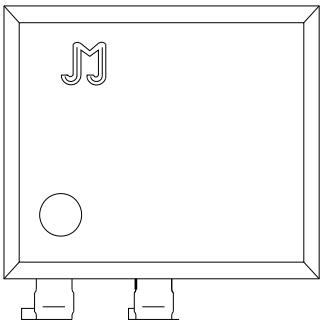

LED Dropout Voltage vs. Ambient Temperature

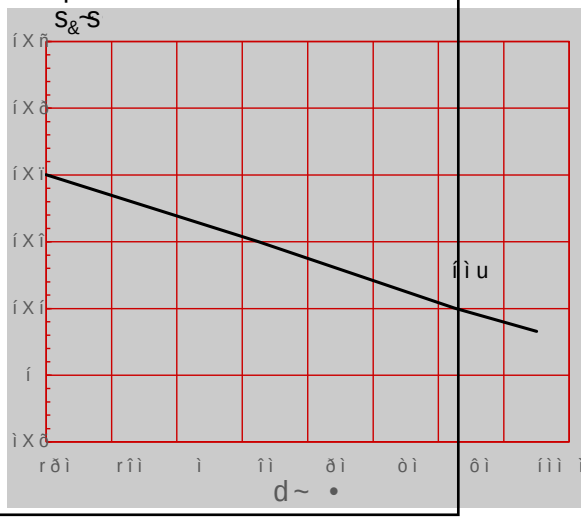

Output Current vs. Output Voltage

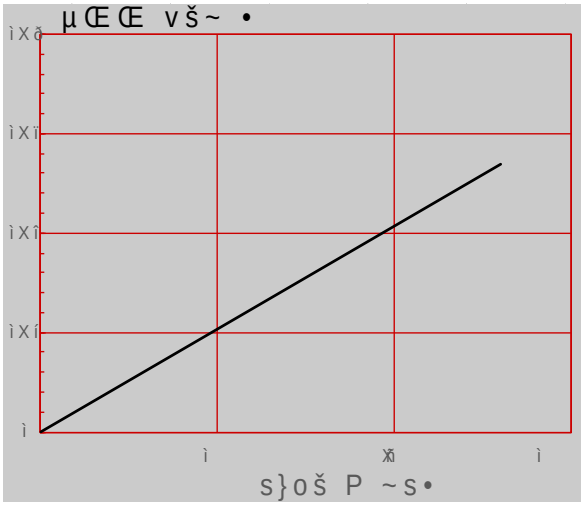

Turn On Time vs. Ambient Temperature

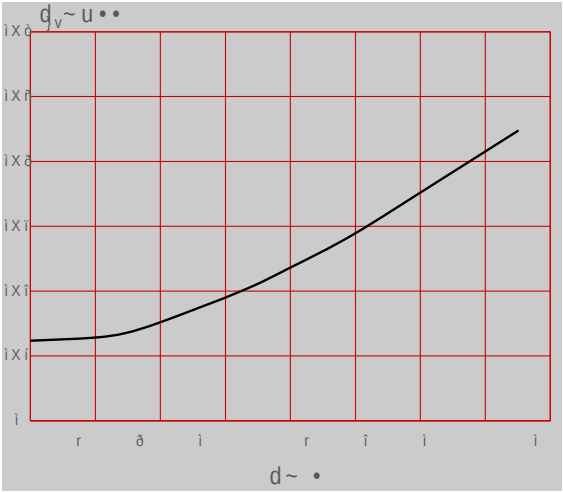

Turn Off Time vs. Ambient Temperature

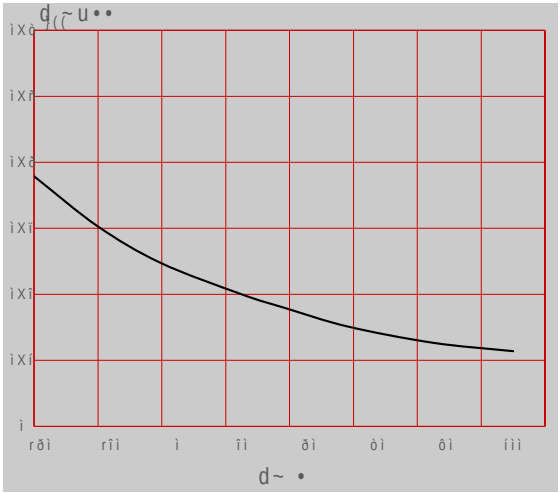

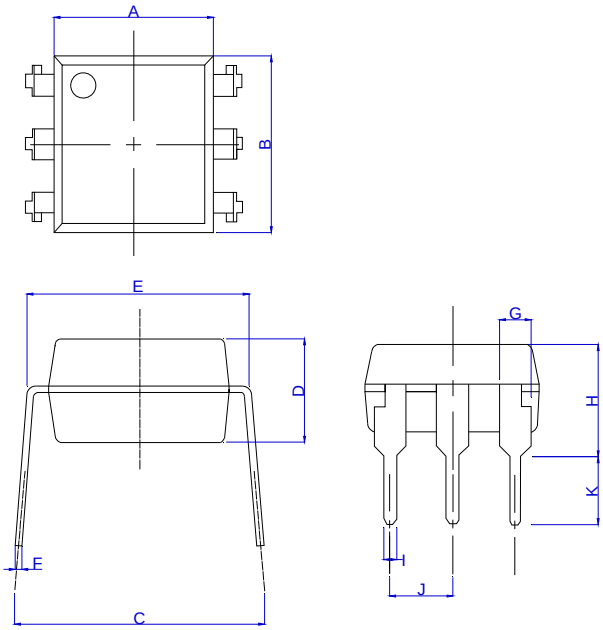

Ref.	Dimensions					
	Millimeters			Inches		
	Min.	Typ.	Max.	Min.	Typ.	Max.
A	6.20		6.60	0.244		0.260
B	6.92		7.32	0.272		0.288
C	7.15		8.95	0.281		0.352
D	3.20		3.60	0.126		0.142
E	7.32		7.92	0.288		0.312
F	0.15		0.35	0.006		0.014
G	1.15		1.35	0.045		0.053
H	3.90		4.50	0.154		0.177
I	0.40		0.60	0.016		0.024
J	2.29		2.79	0.090		0.110
K	2.24		3.24	0.088		0.128

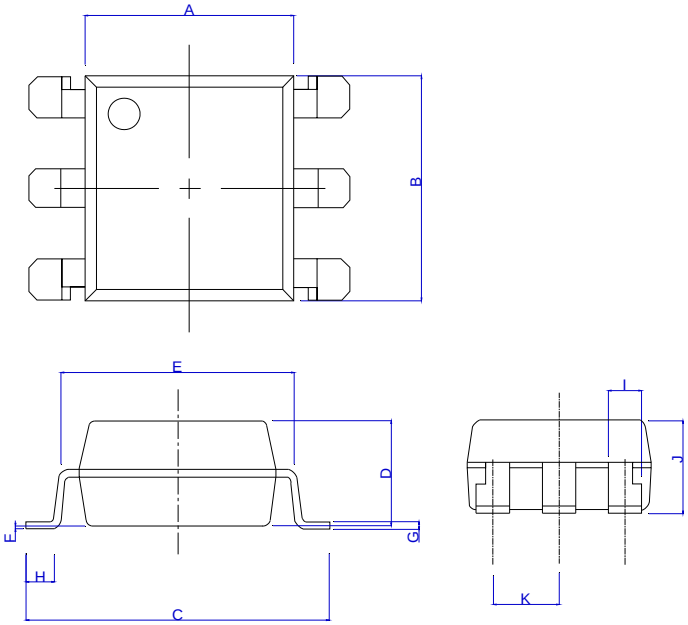

Ref.	Dimensions					
	Millimeters			Inches		
	Min.	Typ.	Max.	Min.	Typ.	Max.
A	6.20		6.60	0.244		0.260
B	6.92		7.32	0.272		0.288
C	9.50		10.50	0.375		0.413
D	3.20		3.60	0.126		0.142
E	7.32		7.92	0.288		0.312
F	0.05		0.35	0.002		0.014
G	0.16		0.36	0.006		0.014
H	0.60		1.40	0.024		0.055
I	0.90		1.50	0.035		0.059
J	3.30		3.90	0.130		0.154
K	2.29		2.79	0.090		0.110

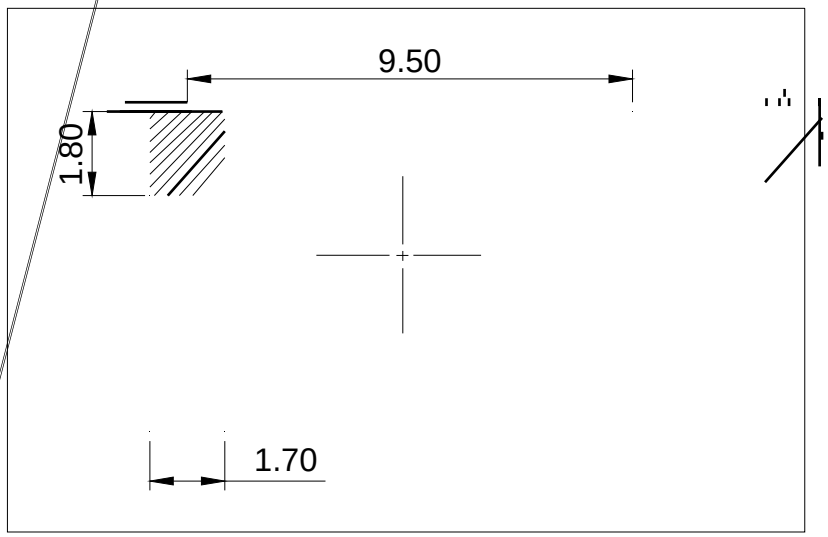
9.50
1.80
1.70

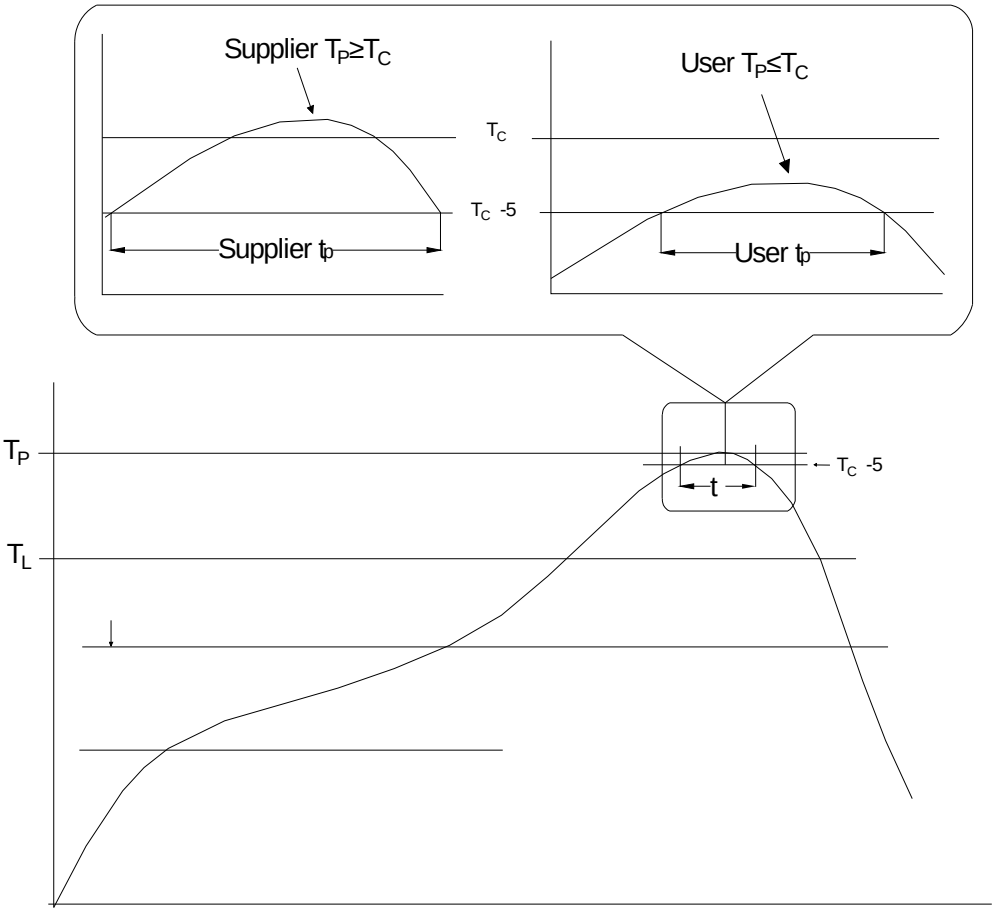
Supplier $T_P \geq T_C$
User $T_P \leq T_C$
T_C
T_C -5
Supplier t_p
User t_p
T_P
T_L
T_C -5
t

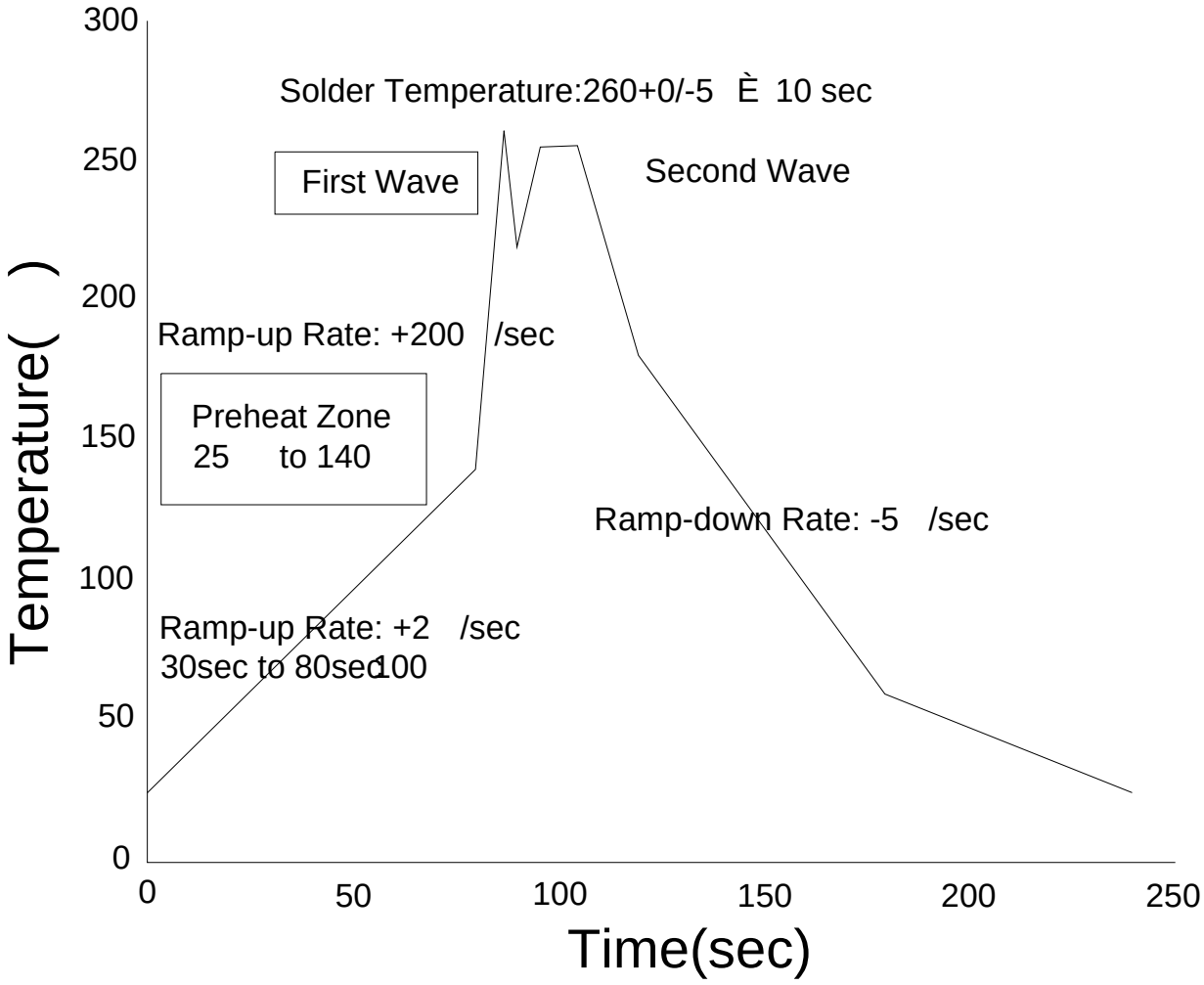
Solder Temperature:260+0/-5 È 10 sec
First Wave
Second Wave
Ramp-up Rate: +200 /sec
Preheat Zone
25 to 140
Ramp-down Rate: -5 /sec
Ramp-up Rate: +2 /sec
30sec to 80sec
Temperature( )
Time(sec)
300
250
200
150
100
50
0
0
50
100
150
200
250

Note:

1. Reflow soldering is recommended at the temperatures and times shown, no more than three times.

2. Avoid direct contact between the epoxy body and any tools or surfaces exceeding its maximum storage temperature.

3. Application of pressure on the epoxy body is prohibited at elevated temperatures. In specific scenarios, any applied force must not exceed 2.5N.

4. Ensure the component has cooled to ambient temperature before proceeding with any subsequent manufacturing steps.

5. The component has a shelf life of one year when stored under standard conditions.

6. Recommend storage Temp.: 0~40°C;

   Recommend storage humidity: <60%;

   MSL level: MSL 1

Information furnished in this document is believed to be accurate and reliable. However, Jiangsu JieJie Microelectronics Co., Ltd. assumes no responsibility for the consequences of use without consideration for such information nor use beyond it. Information mentioned in this document is subject to change without notice, apart from that when an agreement is signed, Jiangsu JieJie complies with the agreement.

Products and information provided in this document have no infringement of patents. Jiangsu JieJie assumes no responsibility for any infringement of other rights of third parties which may result from the use of such products and information. This document supersedes and replaces all information previously supplied.

is a registered trademark of Jiangsu JieJie Microelectronics Co., Ltd.

Copyright © 2026 Jiangsu JieJie Microelectronics Co., Ltd. All rights reserved.